# Mobile Multimedia Broadcasting Vulnerability Threats, Attacks and Security Solutions

Muhammad Sher
Faculty of Electrical Engineering & Computer Science,
Institute for Telecommunication System, Next Generation Networks Integration (AV), Technical University Berlin/
Fokus Fraunhofer Institute Berlin, Germany
sher@fokus.fraunhofer.de

Thomas Magedanz
Faculty of Electrical Engineering & Computer Science,
Institute for Telecommunication System, Next Generation Networks Integration (AV), Technical University Berlin/
Fokus Fraunhofer Institute Berlin, Germany
magedanz@fokus.fraunhofer.de

***Abstract*—The IP Multimedia Subsystem (IMS) has emerged as next generation value added communication services including mobile multimedia broadcasting, multimedia conferencing, push to talk and presence etc on top of all IP networks. Offering multimedia streaming services across heterogeneous fixed and mobile networks have faced many challenges e.g. security, QoS, mobility and services management. In this article our objective is to identity vulnerability threats and attacks, and to study existing potential solutions for mobile multimedia broadcasting. The attacks possibilities are from multiple communication protocols suite i.e. Session Initiation Protocol (SIP) is used for session management, Diameter is used for authentication and authorization, Real-time Transport Protocol (RTP) & Real Time Streaming Protocol (RTSP) are used for media streaming on top of transport and IP infrastructure, therefore facing security challenges from three protocols domains. We will also present extended security by developing Intrusion Detection and Prevention (IDP) System to secure IMS based Mobile Multimedia Broadcasting communication from Denial-of-Service (DoS) attacks.**

***Keywords-Mobile Multimedia, Security, AKA, Confidentiality, Integrity, Denial-of-Service, Intrusion Detection & Prevention***

## I. INTRODUCTION

The evolution of multimedia applications and services has initiated the convergence of networks from both mobile and fixed domains. These services ranging from VoIP, video conferencing to multimedia broadcasting and presence are to be delivered via IP protocol. The provisioning of mobile multimedia services can be offered over different access technologies with unicast, multicast or broadcast transmission modes. Today there are ongoing activities by several standard bodies such as TISPAN [1], 3GPP/MBMS (Multimedia Broadcast/Multicast Services [2], OMA/BCAST (Open Mobile Alliance Mobile Broadcast Services) [3] and DVB (Digital Video Broadcasting) [4] to standardize interactive multimedia streaming systems.

In parallel to offering these fascinating multimedia services in the mobile domain over IP, there is urgent need to provide secure communication environment from both user and content provider perspective. The user requires that his identity and information should be protected. The content and service providers demand that their resources and services should be protected and only authorize users' access them and these resources and multimedia applications are available round the clock. This article will address all possible attacks on IP Multimedia Subsystem (IMS) [5] based mobile multimedia broadcasting and potential existing and extended security solutions.

The article is organised as the following part discusses the layers and architecture of mobile multimedia streaming system. The next two parts describe the vulnerability threats and security architecture. The last part proposes the Intrusion Detection and Prevention (IDP) system as security extension against Denial-of-Service (DoS) attacks.

## II. IMS-BASED MOBILE MULTIMEDIA ARCHITECTURE

The demand of multimedia streaming services has resulted in the evolution of various communication technologies and frameworks, in both the mobile and fixed domains. These technologies have their own benefits and shortcomings depending on different deployment environments and service scenarios [6]. In the following, we present the logical layers and architecture of mobile multimedia broadcasting.

### A. *Mobile Multimedia Layers Model*

The logical architecture of generic mobile multimedia broadcasting based on cross-access convergence of unicast, multicast and broadcast multimedia streaming services [6]. The framework is based on a layering model and deals with all aspects of user, network, service and content provider.

**Access Network Layer** is based on different network access technologies e.g. WLAN, UMTS, CATV, xDSL and DVB supporting unicast, multicast and broadcast communication. It connects the UA with IP core network for media delivery to the end user and offer feedback channel to the network and service providers.

**Delivery Layer** initiates and terminates IP-based unicast, multicast and broadcast bearer with quality of services support for resource reservation and admission control core interfaces with the RACS. It is also responsible for resource scheduling and content distribution, access congestion control and content adaptations along with the control layer [6].

978-1-4244-1720-9/07/$25.00 ©2007 IEEE

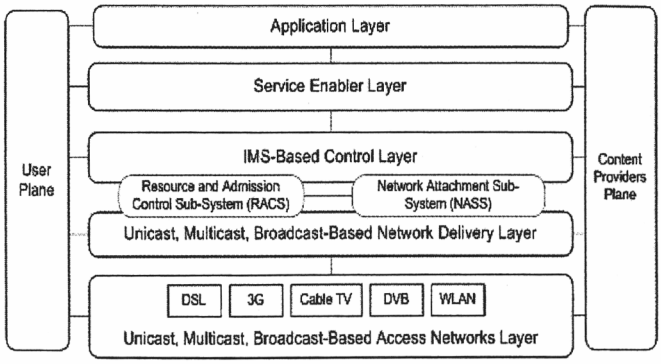


Figure 1. Logical Multimedia Streaming Architecture

**Control Layer** handles the registration of the endpoints and routing of signalling messages to the appropriate application server while guaranteeing QoS across all services. It also maintains the unique service profile for each end user and in charge of media delivery control function.

**Service Enabler Layer** is a cooperative service platform of several enablers among service and content providers, network operator or user. They act as a bridge between the content provider and user and provide standard well defined APIs for future intelligent application development.

**Application Layer** is based on the advance service logic which makes use of the functionality provided by under layering service enablers. User might interact with the application directly for configuration purpose.

**Content Provider Plane** manages and provides live or stored contents.

**User Plane** presents the user premises connected via fixed or mobile access technologies.

### *B. Mobile Multimedia Broadcasting Architecture*

To provide multimedia streaming service with interactive and mobility features over unicast, multicast and broadcast bearers, we have developed prototype of IMS-based hybrid streaming architecture over UMTS and DVB-H access networks [6]. The IMS provides secure session management and DVB-H provides streaming services. The implementation reference architecture and interfaces between the entities are shown in figure 2. The Streaming sErvice Enabler (SEE) is an important element providing multimedia value added services. It has interfaces with IMS core via the ISC reference point and with content provider via the IMS. The user makes use of the IMS client to interact with the SEE through the IMS ISC and the Ut interfaces. To provide advance feature it also makes use of the other service enablers such as presence, messaging, conferencing etc. The SEE is a SIP Servelet application based on the user availability and provides unicast UMTS or broadcast DVB-H bearer. The streaming service enabler plays a central roll in mobile multimedia communication because it controls and manages all streaming sessions. To protect SEE is the root and basic importance of security architecture and the proposed Intrusion Detection and Prevention (IDP) system is deployed and integrated within SEE against denial-of-service attacks.

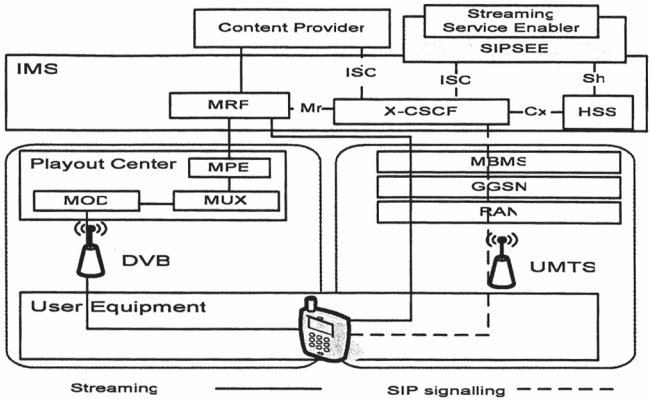


Figure 2. IMS-based Multimedia Streaming Testbed Scenario

## III. Security Threats on Mobile Multimedia

The security attacks on mobile multimedia broadcasting results form three domains i.e. SIP, media flow and IP. In the following we briefly discuss each domain attacks:

### *A. SIP Attacks*

The SIP protocol is employed to establish session between multimedia client and server. SIP is vulnerable to many threats and requires powerful security to protect the multimedia session. The well-know attacks on SIP are following:

**Invite Flooding Attack**: The attacker sends lot of SIP Invite messages to the P-CSCF (Proxy-Call State Control Function) to overload it. In case of incoming Invite request, P/S-CSCF parse, modify, forward and save the states of transactions [7]. If attacker sends a lot of Invite requests to P-CSCF, the resources become congested and it may not process messages from legitimate users.

**Register Flooding Attack**: The Register flooding is similar to the Invite flooding. The Register method is utilized to launch the attack in two ways i.e. legitimate and fake message flooding [8]. In legitimate message flooding the attacker have valid account with a SIP server. In fake message flooding the attacker is not properly authenticated [8] and attack can be launched with fake requests.

**Invite Response Flooding Attack**: The objective of Invite response flooding is trying to get authentication credentials using brute force search. A lot of invite messages are sent in order to crack the password for the authentication.

**Register Response Flooding Attack**: In case of the Register response flooding the attacker sends large number of Register messages to a SIP Proxy trying to acquire the authorization credentials.

**The Cancel attack:** The Cancel terminates a pending request. The attacker may utilize the Cancel method to cancel an Invite request generated by a legitimate user. Before a final response is generated for an Invite request, the attacker sends a faked Cancel message to the P-CSCF that assumes it is received from a legitimate user. The P-CSCF acknowledges the Cancel message and ceases processing the Invite request.

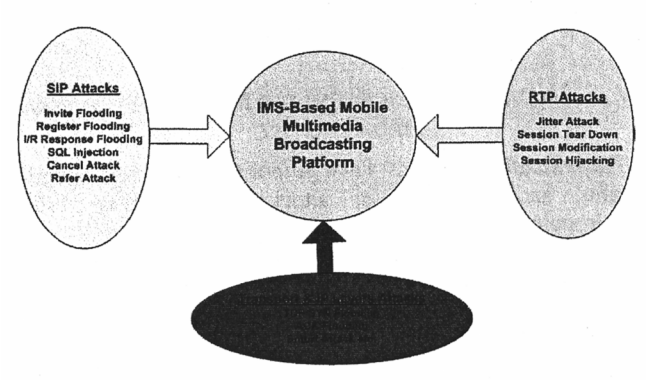


Figure 3. Different Attacks Domains on Mobile Multimedia Broadcasting

**SQL Injection**: It is a type of message tempering attack and text based nature of SIP messages provides opportunity for message tampering attacks. This attack is not only targeting data modification, but causing denial-of-service by downfall of database services [7]. The utilization of web interface for the provision of value-added services in IMS makes this attack more open to the attackers. The SQL injection can be launched simply by inserting SQL statement when UE and P-CSCF starts authentication procedure.

### *B. Media Attacks*

The RTP and RTSP are the recommended protocols used for media streaming for mobile multimedia broadcasting. The important attacks on these protocols are following:

**Jitter Attack**:- In this attack, the attacker sends RTP packets to media client with garbage contents including random data in packet header as well as in payload. As a result the media client receives bad quality of multimedia or even hangs the service [14].

**Session Tear Down Attack:-** The BYE request is used to terminate media session. An attacker could utilize the BYE request to tear down a session. The attacker sends a faked BYE message via P-CSCF to multimedia server to drop the establish session. As a result the multimedia server immediately stops the RTP flow.

**Session Modification Attack**:- A successful Invite request established both a dialog between two user agents and a session using the offer-answer model. The goal of the Re-Invite method is to modify the actual session. The modification may be changing of addresses or ports, adding a media stream, deleting a media stream, and so on. Therefore the attacker could launch a DoS attack by sending a forged Re-Invite message to enforce any unauthorized modification.

### *C. Transport and IP Layers Attacks*

The following attacks are possible on mobile multimedia broadcasting system from transport and IP layers causing denial-of-services (DoS).

**TCP SYN Flooding Attack:-** The SYN flooding attack is a TCP layer flooding attack. The attacker creates number of half-open connections by sending SYN messages to a target server with a spoofed return address and the server never receives the final ACK. As a result the attacker creates increasing number of pending connections, causing the buffer and memory to overflow. To enhance the attack, the attacker could use multiple hosts to launch distributed SYN flooding attack [7].

**ACK Flooding Attack**: It is similar attack to SYN flooding attack but launches in the reverse direction by exploiting the answer packets. The attacker sends packets to randomly chosen destination IP addresses and forges the source address of the packets to the victim's address.

**Smurf Attack**: In this attack, the attacker uses ICMP echo request packets directed to IP broadcast addresses from remote location to cause denial-of-service attacks. The attacker creates ICMP echo request packet by spoofing his address and creates forged packets containing the victim's IP address as source address [7]. As a result all the machines at the intermediary's site respond to the ICMP echo requests to overwhelm.

## IV. IMS SECURITY SOLUTIONS

The objective of IMS security model is to protect mobile multimedia network resources and provide safe communication over wireless and IP networks. This model is based on standards mechanisms. The important features include:

- AKA between multimedia client and home network.
- Security agreement between client and visited network.
- Integrity protection and confidentiality achievement.
- Network domain security between different domains
- Existing GPRS/UMTS access security utilization.

The security model is presented in figure 4 and is based on the following security associations and mechanisms.

**SA1-Authentication and Key Agreement (AKA)** that provides mutual authentication of user and network. The Home Subscriber Server (HSS) is responsible for generating keys and challenges and then it delegates the authentication to the Serving-CSCF. The client has private identity (IP Multimedia Private Identity; IMPI) for authentication purpose. The most important security module is IP Multimedia Services Identity Module (ISIM) to store the secret key (K) and AKA algorithm. The security depends on K shared between ISIM and Network Auth Centre (AUC), and AKA performs mutual authentication of ISIM and AUC and generates Cipher Key (CK) and Integrity Key (IK) [9].

**SA2-Security Management to Protect Air-Interface:** This security association manages secure Gm link between UE and P-CSCF. The protection of this interface is very essential since it involves wireless links. The 3GPP makes use of IPSec as the security mechanism between the P-CSCF and the UE [10].

**SA3-Security between IMS Core and HSS:** It provides security within network domain for Cx-interface. The HSS stores subscriber and service data which is utilized by I/S-CSCF when user registers and selected protocol is Diameter. Diameter messages over Cx interface make use of Stream Control Transmission Protocol (SCTP) with IPSec for security.

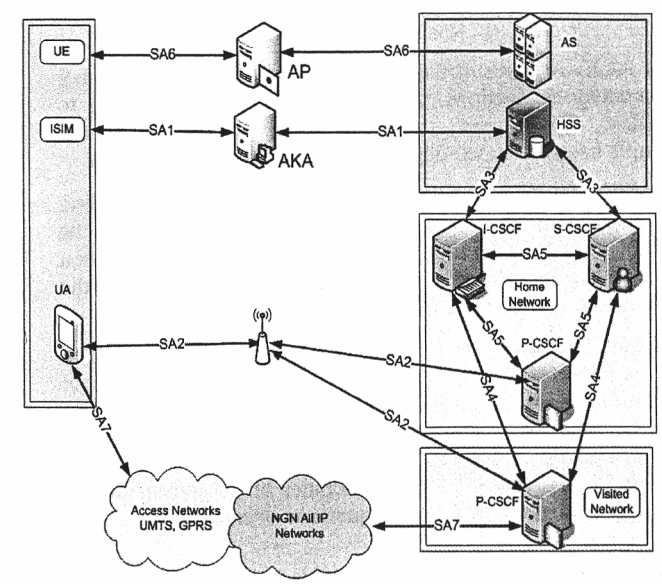


Figure 4. Mobile Multimedia Security Architecture

**SA4-Inter-Domain Security** provides security between different networks for SIP capable nodes and only applicable when P-CSCF resides in visited network i.e. user is roaming. The traffic between the visited and home network are protected using the Network Domain Security/Internet Protocol (NDS/IP) [10] at IP layer. The NDS/IP only protects traffic between network elements in the IP layer. The security gateway (SEG) enforces policy based security management on inbound and outbound traffic between the security domains like packet filtering or firewall functionality [9]. For inter-domain IMS traffic protection, NDS/IP achieves confidentially, data integrity and authentication.

**SA5-Intra-Domain Security** provides security within network internally between SIP capable nodes and also applies when P-CSCF resides in home network. The IMS protects all IP traffic in core network by NDS/IP which uses combination of cryptographic mechanisms and protocol applying IPSec.

**SA6-Security between Client and Streaming Server:** The protocols working across Ut interface performs functionality to manage data traffic for HTTP based applications. Thus securing Ut interface provides confidentiality and data integrity protection of HTTP-based traffic. The authentication and key agreement for Ut interface is also based on AKA to generates session keys. The IMS defines Generic Bootstrapping Architecture (GBA) which is utilizes Generic Authentication Architecture (GAA) that performs mutual authentication by Authentication Proxy before accessing services [11]. The Ut interface employs the Transport Layer Security (TLS) for both confidentiality and integrity protection.

**SA7-Access Network Security** protects user and user's information on access networks e.g. UMTS, GSM, GPRS, WLAN and DSL. The security association takes place independently either in CS or PS service domains. For UMTS access network, security management architecture consists of User Service Identity Module (USIM), Mobile Equipment (ME), Access Network (AN), Service Network (SN) and Home Environment (HE) [10]. USIM is required for accessing Packet Switched (PS) domain in General Packet Radio System (GPRS) and identifies particular subscriber.

## V. Security Enhancement for Mobile Multimedia Broadcasting

The existing solutions have importance in their specific domains and for specific attacks like man-in-middle, eavesdropping and registration hijacking etc. They did not provide security against denial of service flooding attacks. We have developed Intrusion Detection and Prevention (IDP) system to enhance the existing security against Denial-of-Service (DoS) and Distributed (DDoS) attacks which are difficult to be eliminated by low-layer security mechanisms. For example, legitimate un-trusted user can launch SIP flooding attack to down the multimedia broadcasting service. These flooding attacks can be mitigated by our proposed IDP that is integrated with Streaming Service Enabler (SEE). In the following, we discuss the operation, architecture and performance of proposed IDP system for mobile multimedia communication.

### A. *Architectural Design of IDP*

The purpose of IDP is to detect unauthorized access or misuse of network resources. In order to detect intrusion the messages are compared with attacks rules. In case of mobile multimedia communication, all the incoming SIP messages between client and server are passed through the IDP Center that maintains a list of Partner as shown in figure 5. Each user represents a communication partner that exchanges SIP messages with IMS based streaming service enabler. A partner is identified with SIP URI. Each partner has state and number of messages sent or received etc. As IDP Center receives SIP message, it updates the state of corresponding partner or creates a new partner if it does not exist. After the update or generation of corresponding partner, IDP Filter compares it with the rules loaded in the Rule Collection [12]. If a partner matches with any attack patterns, the IDP Center inserts the partner into the Blacklist. The Blacklist maintains the URIs of all the malicious communication partners. Every message from or to a malicious partner whose URI is contained in the Blacklist is denied by the IDP Center.

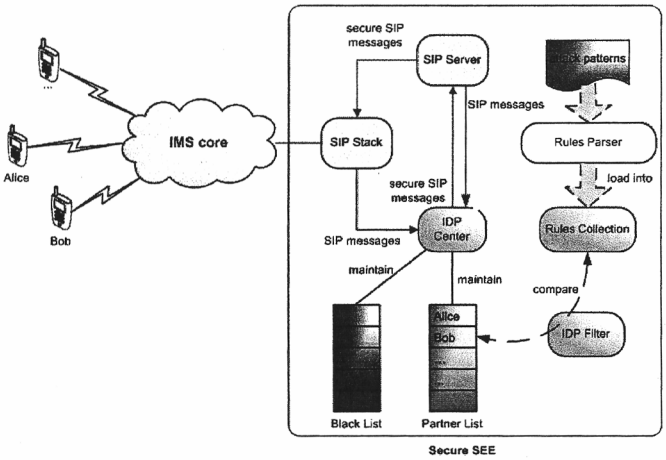


Figure 5. Architecture of IDP for Mobile Multimedia Broadcasting

### B. *Operation and Functionality*

The IMS based Streaming Service Enabler (SEE) can be roughly divided in two subcomponents: SIP Stack and SIP Server. The SIP Stack is responsible for exchanging of SIP messages with S-CSCF via the IP multimedia Service Control Interface (ISC). The SIP Server processes the incoming and originating SIP messages. To protect streaming service enabler from different flooding attacks, all incoming and outgoing SIP messages must be passed through the IDP system. Each SIP message should be compared with the attack patterns contained in the IDP Centre. If a message matches with any attack patterns, the message is blocked. In addition, the IDP system denies the communication partner for further communication about defined time interval. For example, if IDP detects a malicious message from originator bob@example.com, than exchange of messages between the SEE and the bob@example.com will be denied for a defined time interval. To perform operation, first of all IDP system receives an incoming SIP request from SIP Stack as shown in figure 6, and compare it with the defined attacks rules. If the request matches with one or more attacks patterns, it is blocked. Otherwise, the IDP system considers the incoming SIP request to be secure. All the incoming secure requests will be forwarded to the SIP Server.

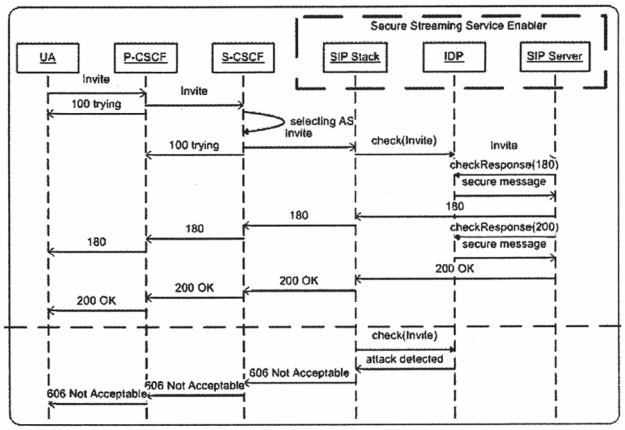


Figure 6. Secure Streaming Service Enabler (SEE) Communication Flow

### C. *Performance Evaluation*

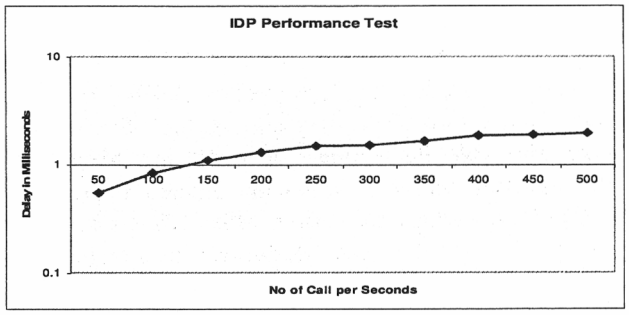


Figure 7. IDP Performance Results

The performance evaluation of Intrusion Detection and Prevention (IDP) prototype is based on measuring the processing overhead for attacks detection. To calculate the performance, the client generates and sends multiple calls to Multimedia Streaming Server starting from 50 to 500 calls per seconds. The performance test results are depicted in figure 7, showing the total IDP processing delay (D) varies from 0.55 ms to 1.98 ms.

## VI. CONCLUSION

In this article we have identified security threats and attacks causing denial-of-service attacks (DoS) on the mobile multimedia streaming communication. These flooding attacks based on SIP, RTP and IP protocols are the most serious threats from media content providers prospective. We have presented security architecture based on standard security mechanisms to protect and provide the secure communication environment for user and service provider. We have also presented Intrusion Detection and Prevention (IDP) system as extended security solution as a part of Open IMS [13] and 3Gb Testbed.

## REFERENCES

[1] DTR 00001, TISPAN; Release 1 Definitions.

[2] 3GPP TS 23.246, "Multimedia Broadcast/ Multicast Service; Architecture and Functional Description", Release 6.

[3] Mobile Broadcast Service Architecture, V 1.0, Open Mobile Alliance, http://member.openmobilealliance.org/ftp/Public_documents/BAC/BCAST/Permanent_documents/

[4] ETSI TS 102 034, Digital Video Broadcasting (DVB); Transport of MPEG2 Based DVB Services over IP Based Networks.

[5] 3GPP, TS 23.228. IP Multimedia Subsystem; (2005). www.3gpp.org

[6] A. Al-Hezmi, T. Magedanz, Y. Rebahi: "Towards an Interactive IPTV for Mobile Subscribers", International Conference on Digital Telecommunications (ICDT), Cap Esterel, France, August, 2006.

[7] Low Cost Tools for Secure and Highly Available VoIP Communication Services (SNOCER), "an research project supported within the Sixth Framework Programme of the EU Commission", http://www.snocer.org/

[8] Chen, E.Y., "Detecting DoS attacks on SIP systems," IEEE Workshop on VoIP Management and Security, Page(s):53 – 58, April 2006.

[9] Poikselkae, M., Mayer, G., Khartabil, H., Niemi, A., "The IMS, IP Multimedia Concepts and Services in the Mobile Domain", John Willey & Sons Ltd, West Sussex, England, 2004.

[10] M. Sher, T. Magedanz, "Development of IMS Privacy & Security Management Framework for Fokus Open IMS Testbed", Journal of Mobile Multimedia, Vol. 2, No.3, pp 225-258, ISSN: 1550-4646 © Rinton Press, USA, 2006

[11] M. Sher, T. Magedanz, "Secure Access to IP Multimedia Services Using Generic Bootstrapping Architecture (GBA) for 3G & Beyond Mobile Networks", 2nd ACM International Workshop on QoS and Security for Wireless and Mobile Networks (ACM Q2SWint 2006), Torremolinos, (Malaga), Spain, October 2-6, 2006.

[12] M. Sher, S. Wu, T. Magedanz, "IEEE/IST Workshop on Monitoring, Attack Detection and Mitigation 2006, Tuebingen, Germany, Proc. IEEE/IST MonAM 2006, ISBN: 3-937201-02-5, pp 38-44, September 28-29, 2006. http://www.diadem-firewall.org/workshop06/.

[13] Open IP Multimedia System (IMS) Playground and Testbed: www.fokus.fraunhofer.de/ims.

[14] Yu-Sung Wu, Saurabh Bagchi, Schin Garg, Navjot Singh, Tim Tsai, SCIDIVE: A Stateful and Cross Protocol Intrusion Detection Architecture for Voice-over-IP Environments, 2004.